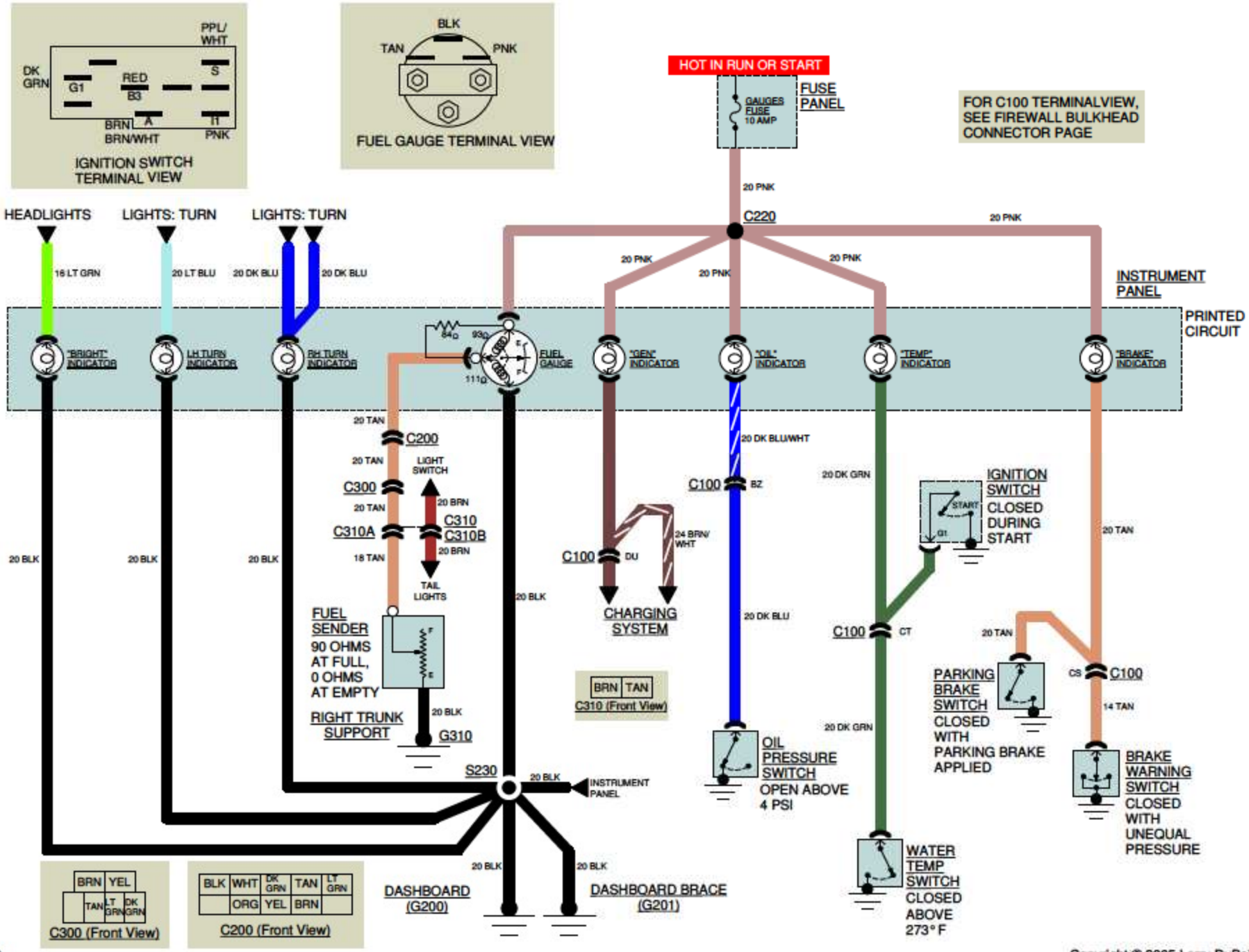

Copyright © 2005 Larry DuBois